2505 Dekko Drive
Garrett, IN 46738
Customer Service: 800.357.5622

Powered by Pent®
WEDGE

(Patent Pending)
- Corded -
Surface Mounting
Installation Instruction

Tools Required

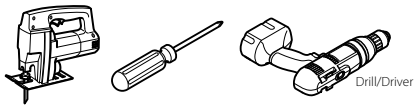

1 Cutout Opening for Wedge Assembly

*** NOTE ***
Max Radius on Cutout Corners is 1/4"

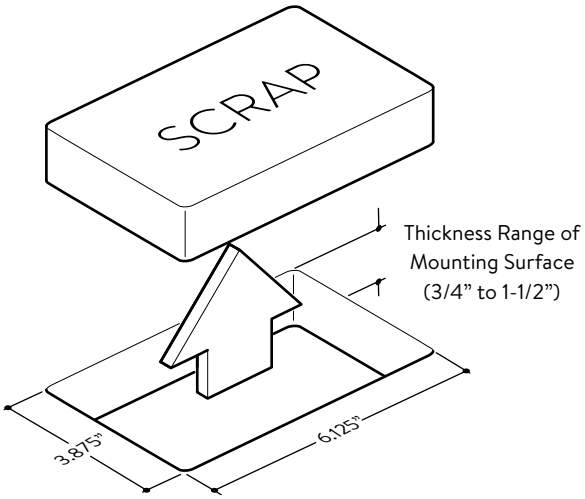

2 Install Wedge Assembly into Cutout

*** NOTE ***
Route "Power Cord" Through Cutout Before Inserting Assembly into Cutout.

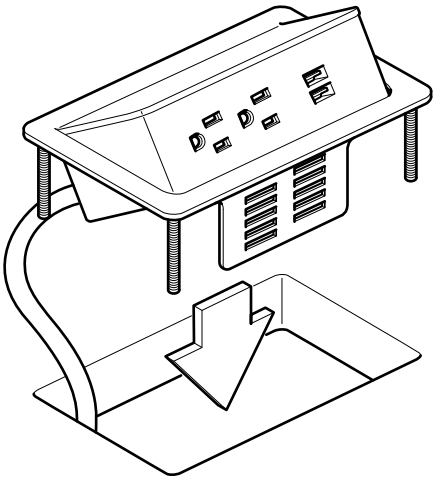

3 Install Wingnuts on the Threaded Studs Below the Worksurface

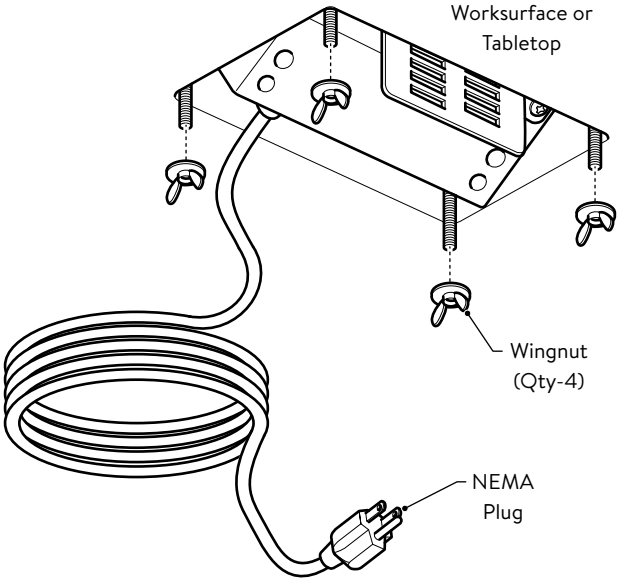

4 Install Locking Tab into Bracket for Tightest Fit and Route Power Cord to Nearest Power Distribution

*** NOTE ***
Pre-drill a Hole for Locking Tab Screw once Tab is Engaged with Slots in Bracket.