POWER SLIP™

HEIGHT ADJUSTABLE TABLE KITS

POWER THAT MOVES WITH YOU.

CURATED KITS FOR HEIGHT ADJUSTABLE TABLES.

Get cord clutter out of the picture with Power Slip™ Height Adjustable Table Kits. Equipped with a sub-surface wire management basket and flush-mounted grommet lid, users have ample cord management options above and below the surface. Power, USB and data capabilities can extend across conjoining sit-to-stand applications utilizing the pre-configured DaisyLink Cable Kit components. In three simple steps, all necessary components to outfit your specific table lengths and requirements are provided.

ECA
BY DEKKO

FEATURES:

Mounting Capabilities
Under-mount

Applications
Height Adjustable Tables

Standard Grommet Finishes -
Silver Pearl
Black
Gloss White

UNIT SPECIFICATIONS:

- 15A/120V AC Receptacles
- 2.1A/5V Shared; Dual USB Charging Ports
- Customizable Telecom Plate Knockouts *(Plates Purchased Separately)*
- Used with 4 Wire 2 Circuit Starter and Interconnecting Cables *(Starters Purchased Separately)*
- Circuit 1 and 2 Options - Link Up-to 40 Receptacles Across 2 Circuits *(US Only)*
- Grommet Accessory & Mounting Hardware Included with Purchase of Power Slip™ Unit
- ETL Listed for US and Canada

CABLE KIT SPECIFICATIONS:

- Height Adjustable Table Sizes: 48", 54", 60", 66", 72", 84", 96"
- Kit Includes:
  - » 2 Female/Male Interconnecting Cables
  - » 1 Loop Cable
  - » 2 "L" Brackets
  - » Cable Clamps and Screws

HEIGHT ADJUSTABLE TABLE KIT COMPONENTS

Unit Purchased separately; Refer to HAT table kit chart page for details

DAISYLINK
2 POWER 2 USB
GROMMET LID SHOWN

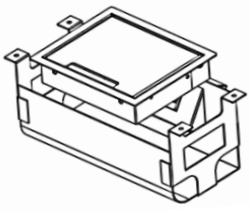

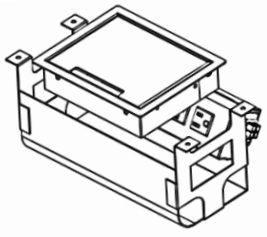

DAISYLINK
4 POWER 2 USB
GROMMET LID SHOWN

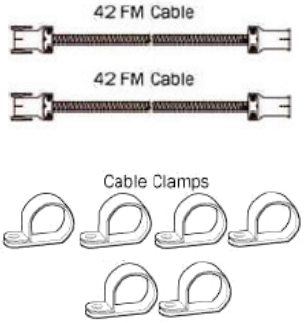

Series dimensions on following page...

ECA BY DEKKO

POWER SLIP | POWER, USB & DATA

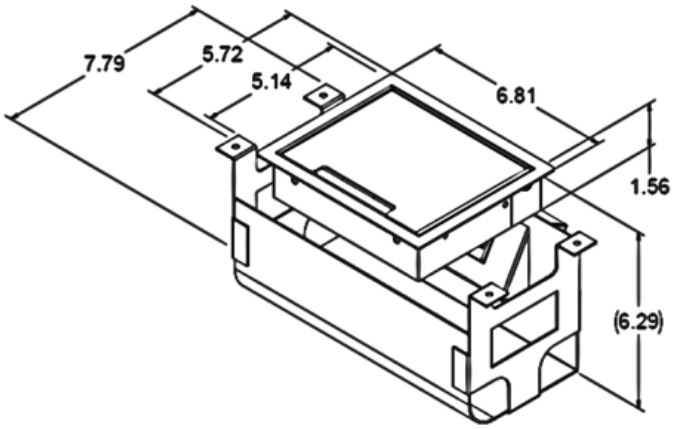

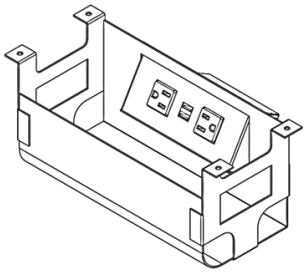

2 RECEPTACLES
DUAL USB PORT
2 TELECOM PLATE KNOCKOUTS
GROMMET LID

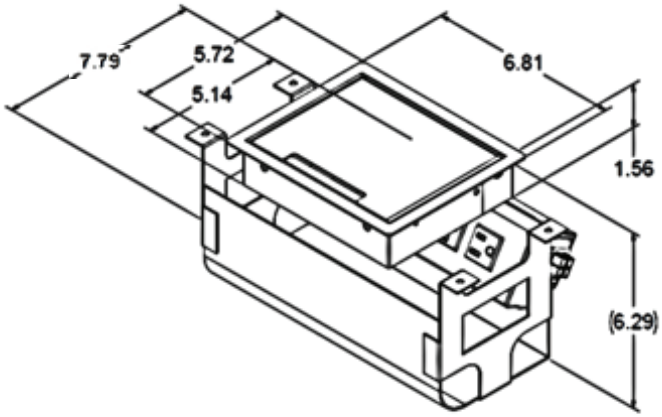

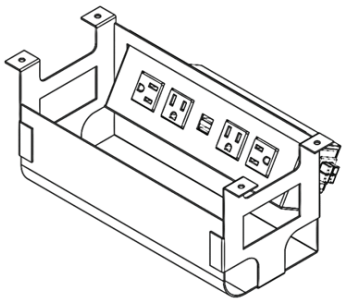

4 RECEPTACLES
DUAL USB PORT
2 TELECOM PLATE KNOCKOUTS
GROMMET LID

Ordering information on following page...

HEIGHT ADJUSTABLE TABLE KITS			
TABLE SIZE	**FM CABLE LENGTH**	**FM CABLE LENGTH**	**LOOP CABLE**
48"	FM-13"	FM-13"	48"
54"	FM-16"	FM-16"	48"
60"	FM-19"	FM-19"	48"
66"	FM-22"	FM-22"	48"
72"	FM-25"	FM-25"	48"
84"	FM-31"	FM-31"	48"
96"	FM-37"	FM-37"	48"

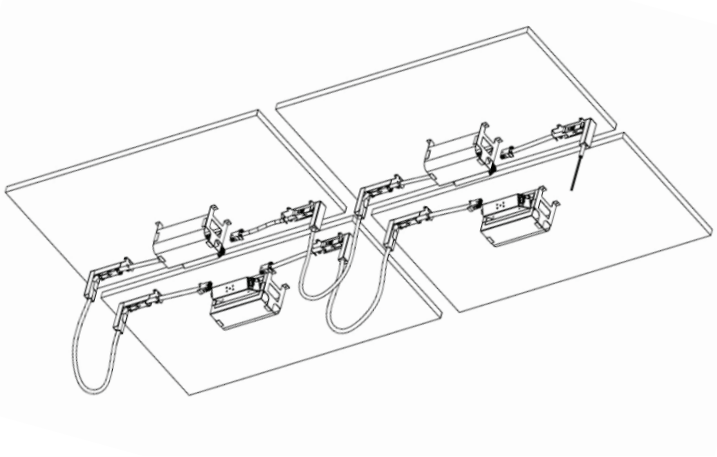

Shown Above:
Four Power Slip units connected across four height adjustable table applications.

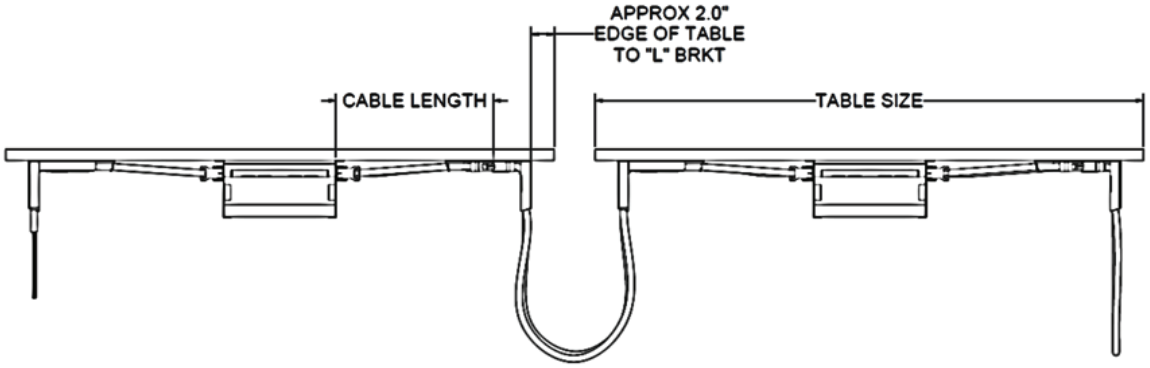

NOTE:
All DaisyLink™ products come equipped with male-end connectors *(Male ends extend outward)*

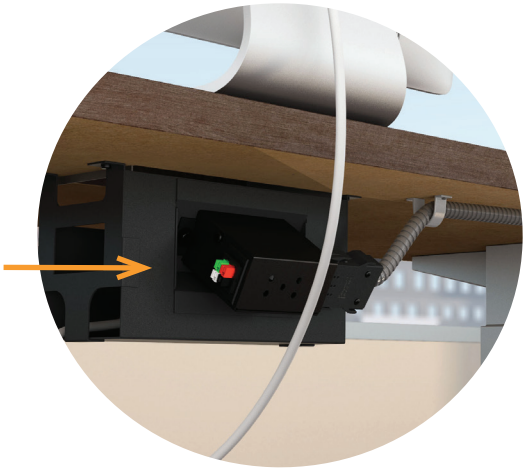

Ordering information on following page...

HEIGHT ADJUSTABLE TABLE KITS

COMPLETE KIT WITH STEPS 1-3

STEP 1: SELECT YOUR POWER:

CHOOSE YOUR FINISH:

POWER RECEPTACLES	DUAL USB PORT	TELECOM PLATE KNOCKOUT	SILVER PEARL	BLACK	GLOSS WHITE
POWER SLIP™ | CIRCUIT 1					
2	1	2	PS-41-2U-S	PS-41-2U-B	PS-41-2U-GW
4	1	2	PS-41-4U-S	PS-41-4U-B	PS-41-4U-GW

CHANGE -41 TO -42 TO SPECIFY CIRCUIT 2 CONFIGURATIONS
TELECOM PLATES SOLD SEPARATELY
CALL FOR PRICING

STEP 2: SELECT YOUR HAT CABLE KIT:

TABLE LENGTH	
48"	HAT42-CAB-48K
54"	HAT42-CAB-54K
60"	HAT42-CAB-60K
66"	HAT42-CAB-66K
72"	HAT42-CAB-72K
84"	HAT42-CAB-84K
96"	HAT42-CAB-96K

Step 3: Starter Infeeds and data knockout options on following page...

STEP 3: SELECT YOUR STARTER INFEED OPTION:

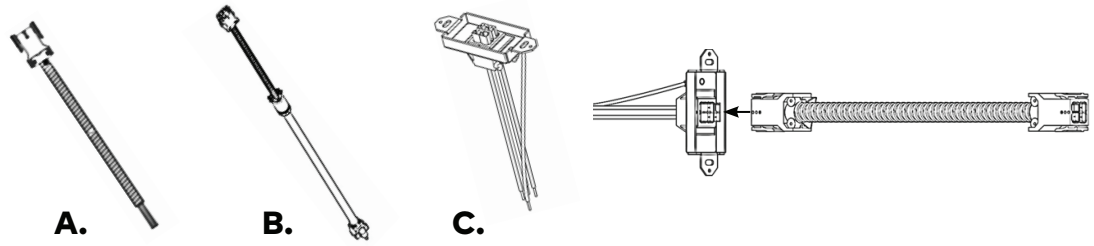

	DESCRIPTION	FINISH/ LENGTH	PART NUMBER
A.	Hardwired multi-circuit starter infeed with female DaisyLink™ connector; hardwires into electrical junction box ***Specify in increments of 1" Cable Lengths in Part Number**	12" Min - 180" Max	42 SB2-XXX*
B.	Molded 3-prong plug single-circuit starter power Infeed with female DaisyLink™ connector; plugs directly into wall or floor outlet	72"	42 20AP1-72"
C.	Quick Disconnect multi-circuit wall/floor insert with male DaisyLink™ connector; wires into junction box to accept female DaisyLink™ interconnecting cable (**To be used with 42 FF-XXX interconnecting cable)**	Black	42 QD INSERT

To learn how to configure and assemble a 4 wire 2 circuit system, see DAISYLINK™ system literature for details - or contact our knowledgeable customer service team for additional support

DATA CONNECTORS *(OPTIONAL)*

SELECT YOUR DATA KNOCKOUT OPTIONS:

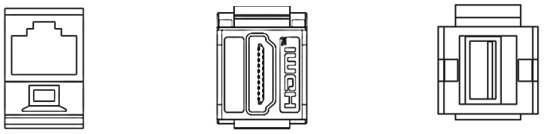

	DESCRIPTION	FINISH	PART NUMBER
A.	RJ45 cat 6 punch down data jack, *Siemon™ brand*	Black	RJ45-B
B.	HDMI keystone jack, female/female	Black	HDMI-KEY-B
C.	USB 2.0 Type-A keystone, female/female	Black White	USB-20AA-B-72K USB-20AA-W-72K

Additional data options available
Please contact our knowledgeable customer service team for more details

Wire management add-on accessories on following page...

WIRE MANAGEMENT ACCESSORIES

SELECT YOUR HAT WIRE MANAGER OPTIONS:

A.

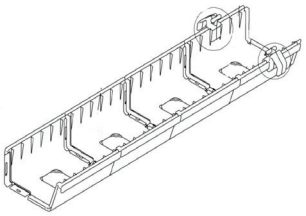

B.

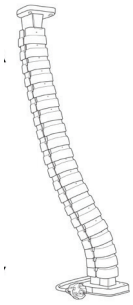

DESCRIPTION	FINISH	PART NUMBER
A. **Table Trough** | *Horizontal Wire Manager* • Includes 5 Linkable Trough Sections (assembles to custom lengths in 8" Increments); 1 Fold Fastening Set; 2 End Caps (Screws Not Included)	Black Silver	TBL-TROUGH-B TBL-TROUGH-S
B. **Snake** | *Vertical Wire Manager* • Works in Unison with Table Trough - Installs Into Trough Openings; Adjacent to or as an Individual Accessory	Black Silver Gloss White	SNAKE-BL SNAKE-S SNAKE-W